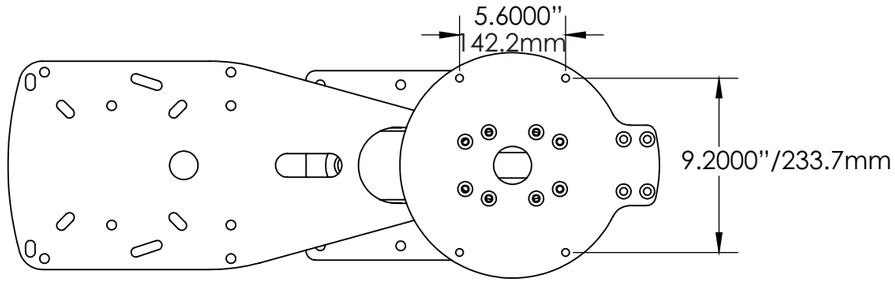

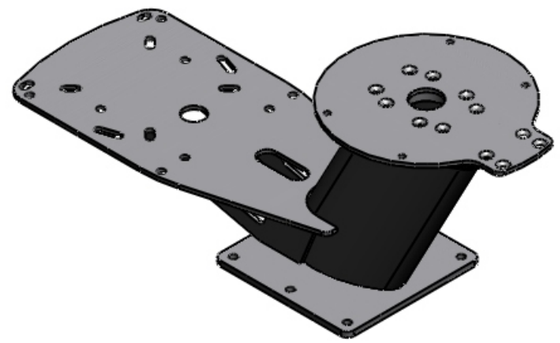

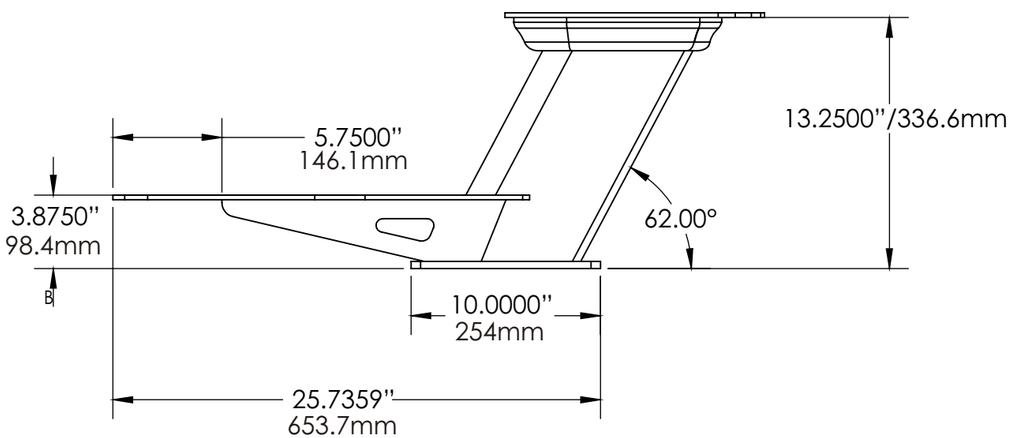

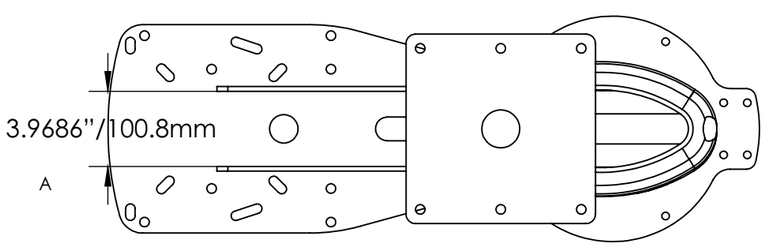

PROPRIETARY AND CONFIDENTIAL

THE INFORMATION CONTAINED IN THIS DRAWING IS THE SOLE PROPERTY OF PYI, INC. ANY REPRODUCTION IN PART OR AS A WHOLE WITHOUT THE WRITTEN PERMISSION OF PYI, INC.

NEXT ASSY	USED ON	UNLESS OTHERWISE SPECIFIED:		NAME	DATE
		DIMENSIONS ARE IN INCHES/mm TOLERANCES: FRACTIONAL ± ANGULAR: MACH ± BEND ± TWO PLACE DECIMAL ± THREE PLACE DECIMAL ±	DRAWN	JR	01.18.08
			CHECKED		
			ENG APPR.		
			MFG APPR.		
		INTERPRET GEOMETRIC TOLERANCING PER:	Q.A.		
		MATERIAL	COMMENTS:		
		FINISH			
WEIGHT:	SHEET 1 OF 4	DO NOT SCALE DRAWING			

PYI, INC.
Beverly Park Rd
Lynnwood, WA 98087
Ph. 425-355-3669 Fax. 425-355-3661

TITLE:
Dual Mount to fit up to 24" Radomes and most 15" Satdomes.

SIZE	DWG. NO.	REV
B	PMA-DM1-M3	A
SCALE: 1:8	WEIGHT:	SHEET 1 OF 4